WP6B/R Pressure tight hoods/housings

Degree of protection: IP68/IP69K

W version

Hoods, top entry, high construction

Thread	Designation	Order No.
M20	WP6B/R-TEH-2S-M20	111 106 420 1002
M25	WP6B/R-TEH-2S-M25	111 106 420 1001

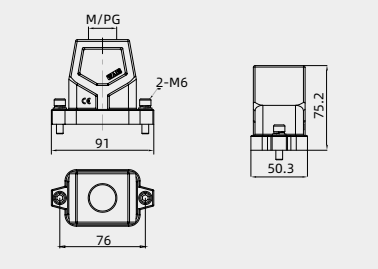

Through-wall housing, high construction
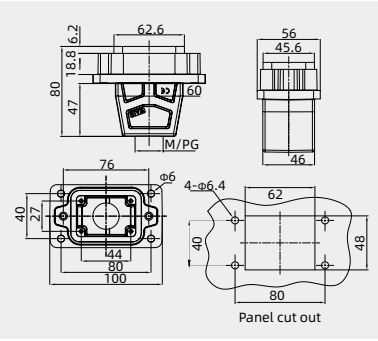
Thread	Designation	Order No.
M20	WP6B/R-CCT/BK-2H-M20	111 106 720 1001
M25	WP6B/R-CCT/BK-2H-M25	111 106 720 1002